APRO® Technologie GmbH

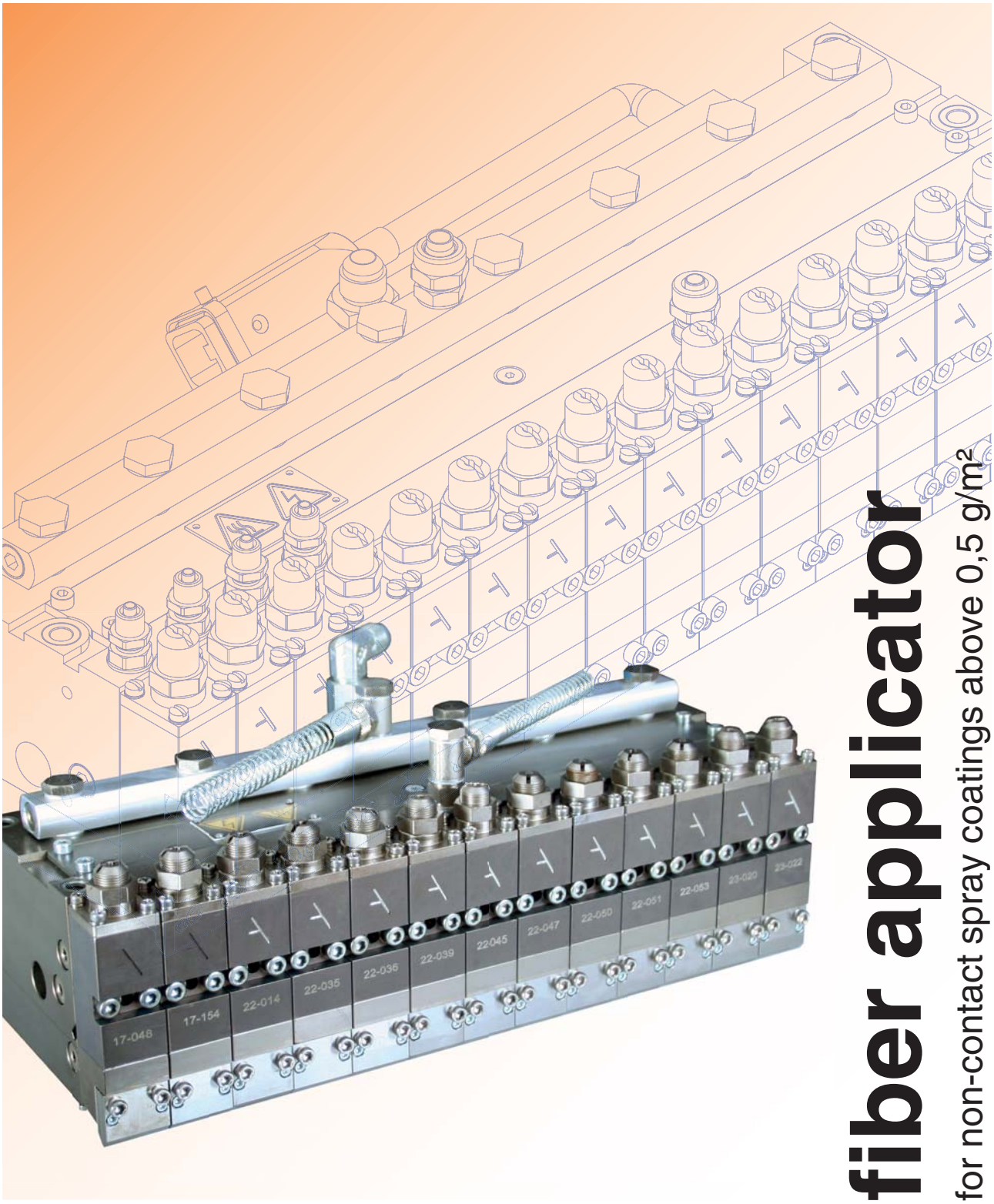

fiber applicator

for non-contact spray coatings above 0,5 g/m²

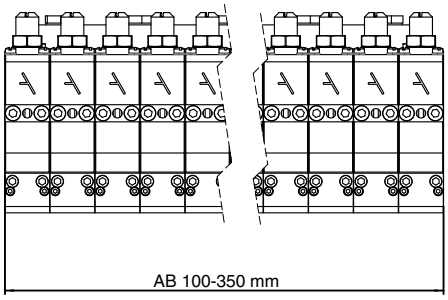

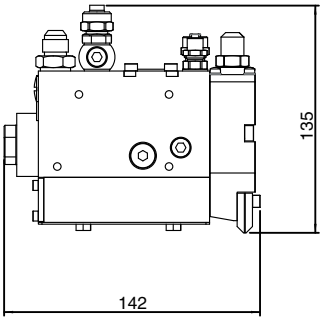

picture fiber nozzle

picture summit nozzle

APRO fiber applicators and APRO fiber nozzles have been developed to offer a simple and secure way to spray hotmelt adhesive.
The nozzle is easy to exchange, you can easily disassemble and clean the nozzle yourself.

The APRO fiber applicators are the inexpensive alternative to UFD. Our modules and nozzles can be used on UFD applicator heads. Also you can use UFD nozzles on our fiber applicators.

It doesn't matter whether you apply intermittent or continuously hotmelt adhesive. Our modules A250-Pro are manufactured under high quality standards, they are very reliable and achieve up to 50 Mio. cycles under optimal conditions.

This non-contact application method gives you the opportunity to use the technology for serveral different applications. If you need to apply hotmelt adhesive uniformly to temperature sensitive substrates, fiberisation is invincible.

The microscopic filaments of hot-melt adhesive can uniquely benefit your product design with flexibility, elasticity or breathability.

Technical data

operating voltage	230 or 120 VAC
frequency	50/60 Hz
sensor	FeCuNi or PT100 or Ni120 or NTC
heating power	approx. 1,100 watts/100 mm
electrical connection	due to temperature sensor 1 zone for glue manifold 1 zone for air heat exchanger
temperature range	20 - 250 °C
glue inlet	BSPP1/4 or BSPP3/8, due to output
glue pressure	up to 10 MPa (100 bar)
air connection	ø6 - ø12 mm, due to size
air consumption	5 - 25 ltr./min per 25 mm nozzle
total coating width	25 to 5.000 mm
coat weight	0,5 to 100 g/m²

Our standard features:
- glue filter as standard
- reliable control module easy to be repaired
- high quality heater cartridges and temperature sensors
- ready-to go available for major brands of adhesive supply units (with correct sensor, electrical plug and glue fitting)

All our products:
- hotmelt systems
- heated hoses
- applicator heads
- pattern controller
- coating machines
- print heads for hotmelt
- spare parts for all brands

We have ready solutions and develope individually for the:
- hygiene industry
- converting industry
- packaging industry
- filter industry
- wood working industry
- automotive industry

Your benefits @ APRO:
- we implement your needs
- we have long lasting professional competence (since 1992)
- we are fast and flexible
- we offer unlimited service availability and provide best quality products
- you will be our focus of attention

APRO® Technologie GmbH
Im Huelsenfeld 19
40721 Hilden
Germany

Phone +49-(0)2103 - 39872-0
Fax +49-(0)2103 - 39872-11
www.apro-systems.com
E-Mail info@apro-systems.com

The content is copyrighted.
Reprinting is prohibited.
FI-E APRO GmbH © 2026